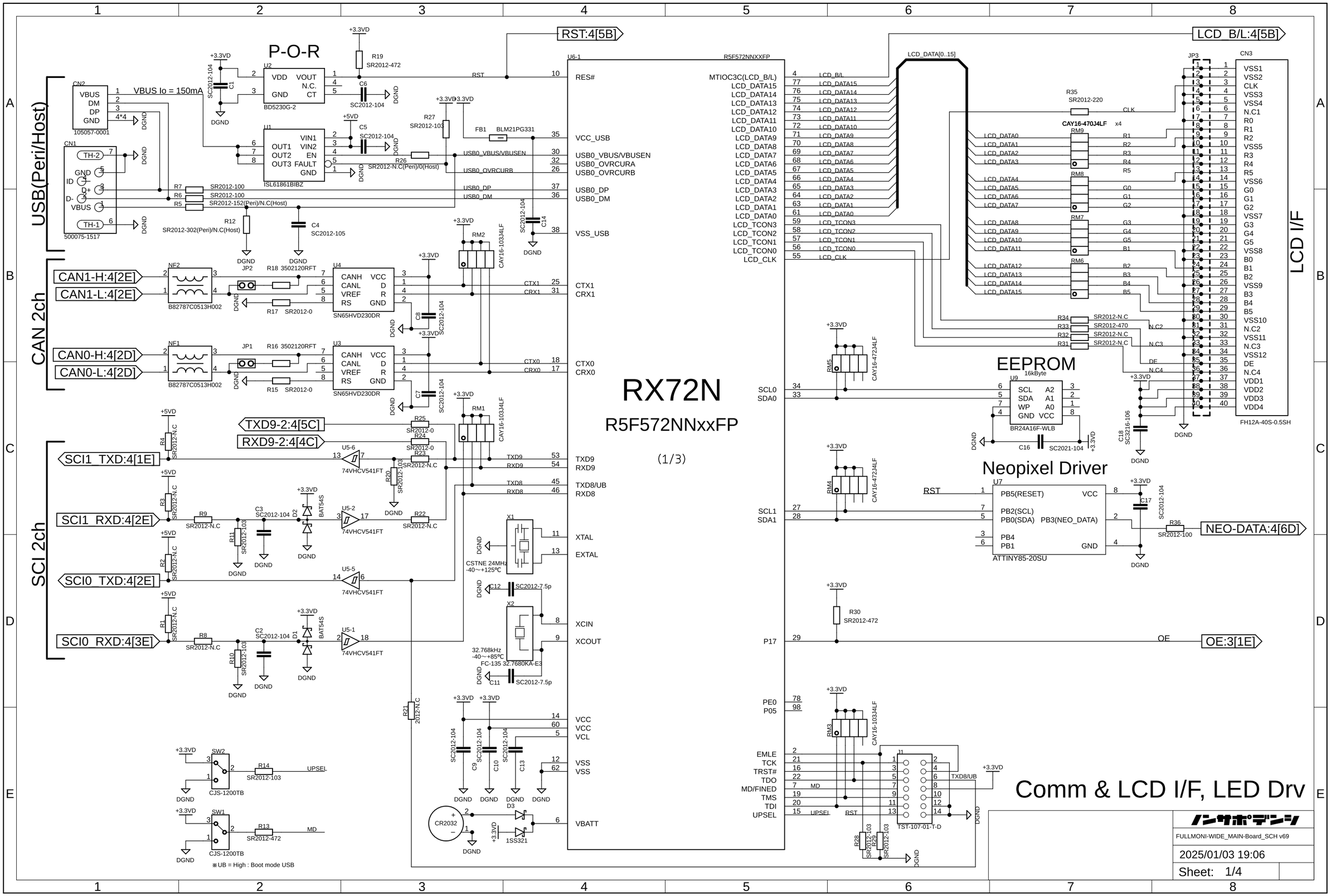
P-O-R
USB(Peri/Host)
CAN 2ch
SCI 2ch
RX72N
R5F572NNxxFP
(1/3)
LCD I/F
EEPROM
Neopixel Driver
Comm & LCD I/F, LED Drv
RST:4[5B]
LCD_B/L:4[5B]
CAN1-H:4[2E]
CAN1-L:4[2E]
CAN0-H:4[2D]
CAN0-L:4[2D]
TXD9-2:4[5C]
RXD9-2:4[4C]
SCI1_TXD:4[1E]
SCI1_RXD:4[2E]
SCI0_TXD:4[2E]
SCI0_RXD:4[3E]
NEO-DATA:4[6D]
OE:3[1E]
VBUS Io = 150mA
※UB = High : Boot mode USB
FULLMONI-WIDE_MAIN-Board_SCH v69
2025/01/03 19:06
Sheet: 1/4

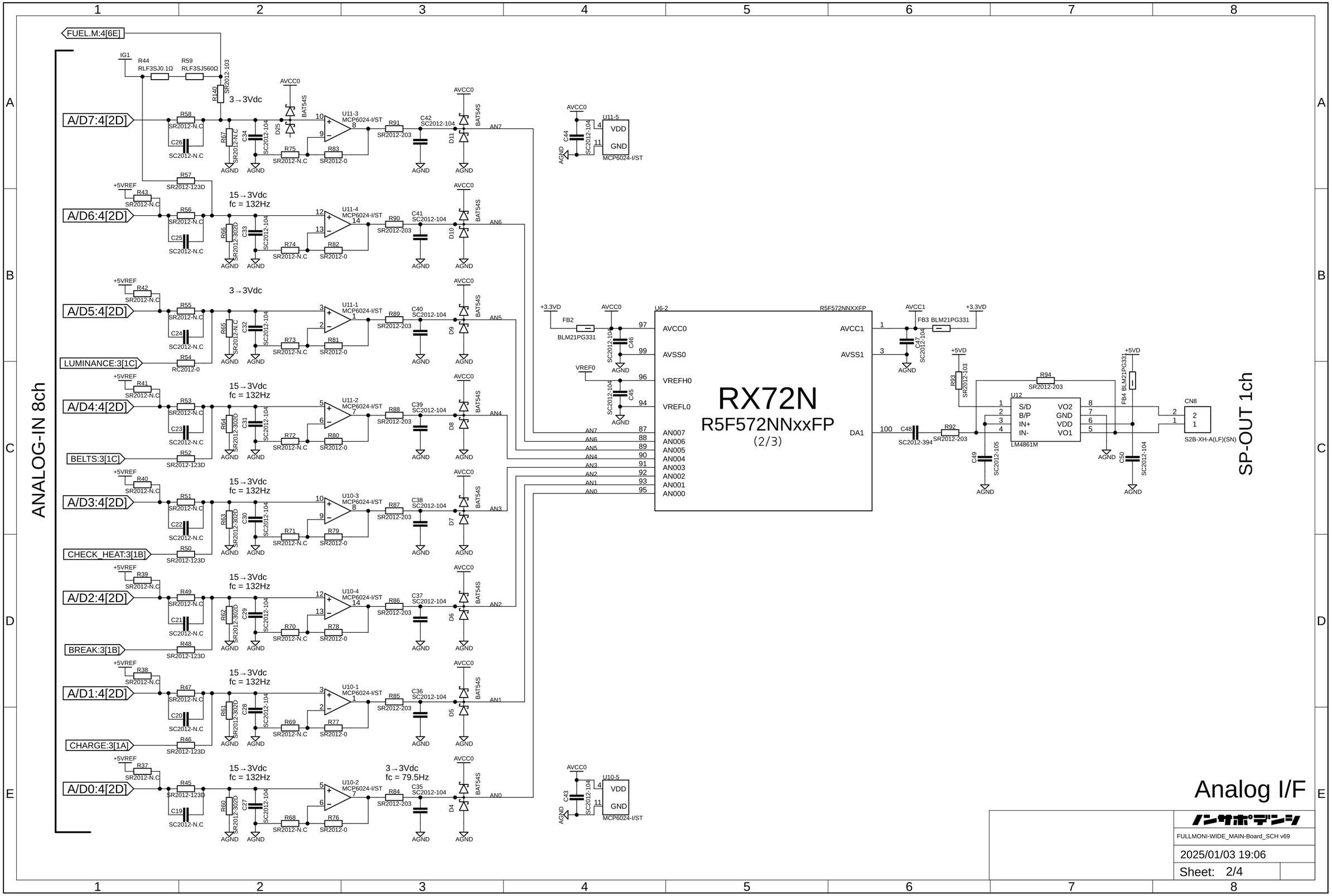
ANALOG-IN 8ch
SP-OUT 1ch
RX72N
R5F572NNxxFP
(2/3)
Analog I/F
FULLMONI-WIDE_MAIN-Board_SCH v69
2025/01/03 19:06
Sheet: 2/4
A/D7:4[2D]
A/D6:4[2D]
A/D5:4[2D]
A/D4:4[2D]
A/D3:4[2D]
A/D2:4[2D]
A/D1:4[2D]
A/D0:4[2D]
LUMINANCE:3[1C]
BELTS:3[1C]
CHECK_HEAT:3[1B]
BREAK:3[1B]
CHARGE:3[1A]
FUEL.M:4[6E]
3→3Vdc
15→3Vdc
fc = 132Hz
3→3Vdc
fc = 79.5Hz
U11-3 MCP6024-I/ST
U11-4 MCP6024-I/ST
U11-1 MCP6024-I/ST
U11-2 MCP6024-I/ST
U10-3 MCP6024-I/ST
U10-4 MCP6024-I/ST
U10-1 MCP6024-I/ST
U10-2 MCP6024-I/ST
U11-5 MCP6024-I/ST
U10-5 MCP6024-I/ST
U6-2
U12 LM4861M
CN8 S2B-XH-A(LF)(SN)
AVCC0
AVCC1
+3.3VD
+5VD
+5VREF
AGND
VREF0
DA1
AN7
AN6
AN5
AN4
AN3
AN2
AN1
AN0

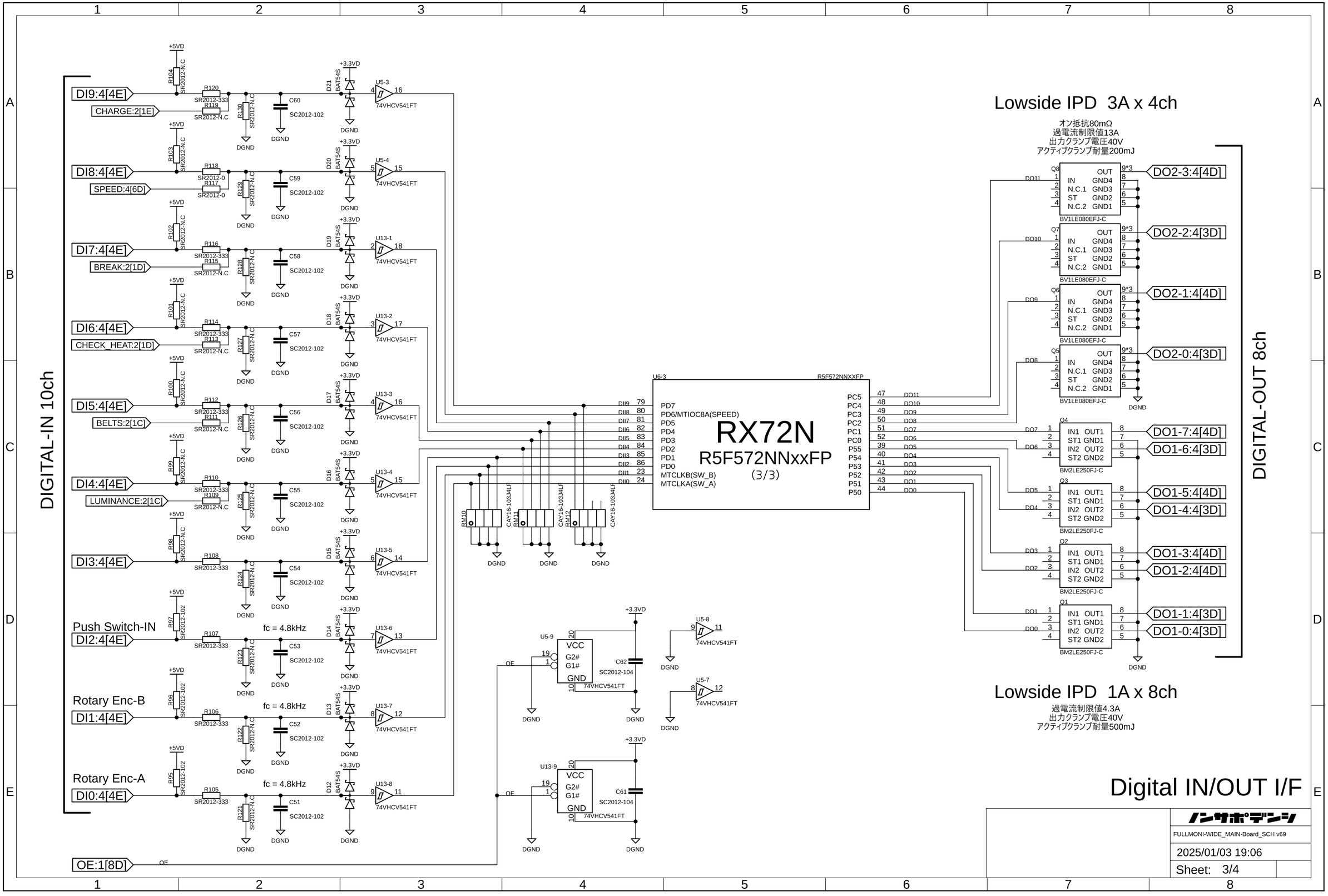
DIGITAL-IN 10ch
DI9:4[4E]
CHARGE:2[1E]
DI8:4[4E]
SPEED:4[6D]
DI7:4[4E]
BREAK:2[1D]
DI6:4[4E]
CHECK_HEAT:2[1D]
DI5:4[4E]
BELTS:2[1C]
DI4:4[4E]
LUMINANCE:2[1C]
DI3:4[4E]
Push Switch-IN
DI2:4[4E]
Rotary Enc-B
DI1:4[4E]
Rotary Enc-A
DI0:4[4E]
OE:1[8D]
fc = 4.8kHz
74VHCV541FT
RX72N
R5F572NNxxFP
(3/3)
R5F572NNXXFP
U6-3
PD7
PD6/MTIOC8A(SPEED)
PD5
PD4
PD3
PD2
PD1
PD0
MTCLKB(SW_B)
MTCLKA(SW_A)
PC5
PC4
PC3
PC2
PC1
PC0
P55
P54
P53
P52
P51
P50
Lowside IPD 3A x 4ch
オン抵抗80mΩ
過電流制限値13A
出力クランプ電圧40V
アクティブクランプ耐量200mJ
BV1LE080EFJ-C
BM2LE250FJ-C
DO2-3:4[4D]
DO2-2:4[3D]
DO2-1:4[4D]
DO2-0:4[3D]
DO1-7:4[4D]
DO1-6:4[3D]
DO1-5:4[4D]
DO1-4:4[3D]
DO1-3:4[4D]
DO1-2:4[4D]
DO1-1:4[3D]
DO1-0:4[3D]
DIGITAL-OUT 8ch
Lowside IPD 1A x 8ch
過電流制限値4.3A
出力クランプ電圧40V
アクティブクランプ耐量500mJ
Digital IN/OUT I/F
FULLMONI-WIDE_MAIN-Board_SCH v69
2025/01/03 19:06
Sheet: 3/4

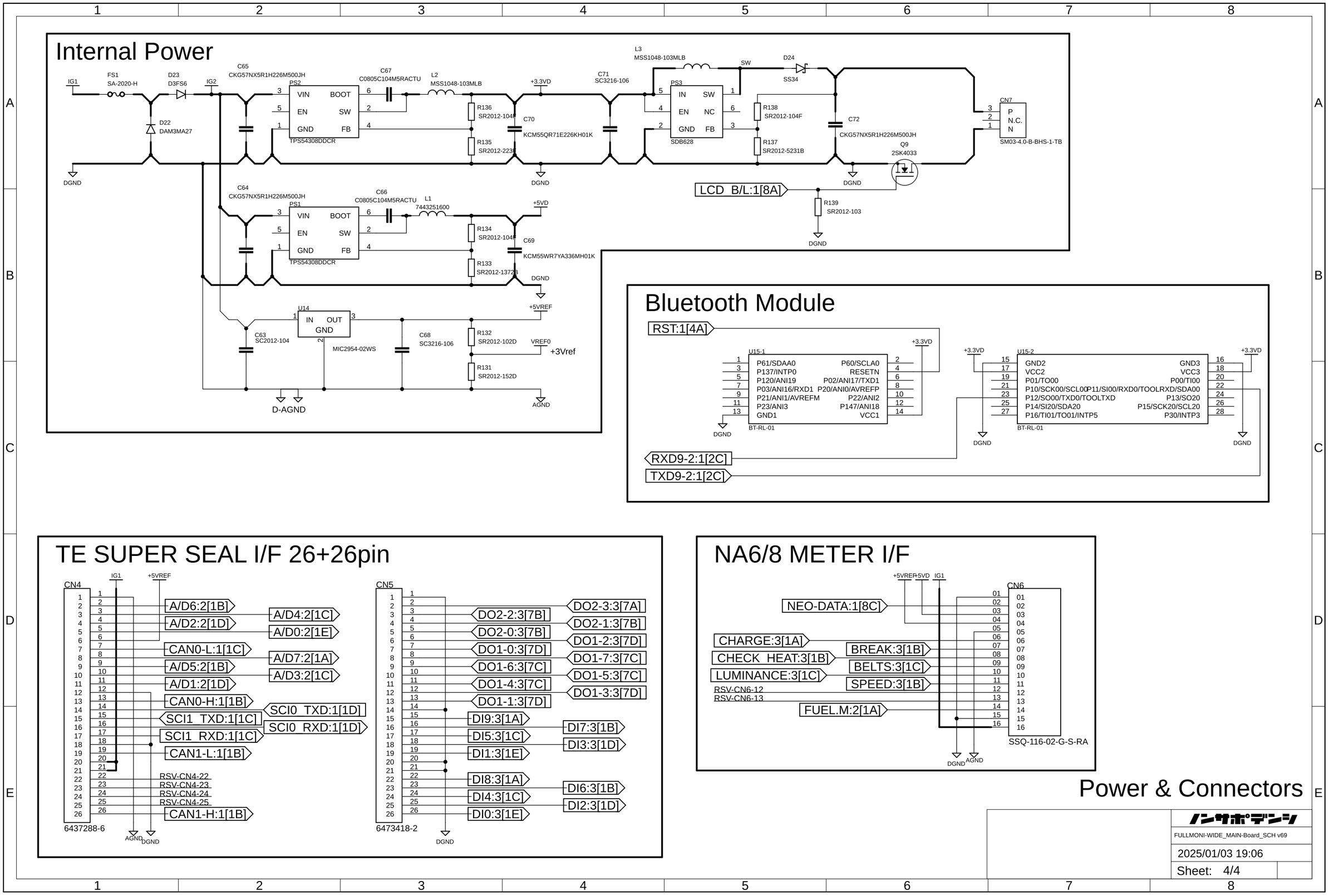
Internal Power
IG1
FS1
SA-2020-H
D23
D3FS6
IG2
D22
DAM3MA27
DGND
C65
CKG57NX5R1H226M500JH
PS2
VIN
BOOT
EN
SW
GND
FB
TPS54308DDCR
C67
C0805C104M5RACTU
L2
MSS1048-103MLB
R136
SR2012-104F
R135
SR2012-223F
C70
KCM55QR71E226KH01K
+3.3VD
C71
SC3216-106
L3
MSS1048-103MLB
SW
D24
SS34
PS3
IN
SW
EN
NC
GND
FB
SDB628
R138
SR2012-104F
R137
SR2012-5231B
C72
CKG57NX5R1H226M500JH
Q9
2SK4033
CN7
P
N.C.
N
SM03-4.0-B-BHS-1-TB
LCD B/L:1[8A]
R139
SR2012-103
C64
CKG57NX5R1H226M500JH
PS1
C66
C0805C104M5RACTU
L1
7443251600
+5VD
R134
SR2012-104F
R133
SR2012-137F3
C69
KCM55WR7YA336MH01K
U14
IN
OUT
GND
MIC2954-02WS
C63
SC2012-104
C68
SC3216-106
+5VREF
R132
SR2012-102D
VREF0
+3Vref
R131
SR2012-152D
D-AGND
AGND
Bluetooth Module
RST:1[4A]
U15-1
P61/SDAA0
P137/INTP0
P120/ANI19
P03/ANI16/RXD1
P21/ANI1/AVREFM
P23/ANI3
GND1
P60/SCLA0
RESETN
P02/ANI17/TXD1
P20/ANI0/AVREFP
P22/ANI2
P147/ANI18
VCC1
BT-RL-01
U15-2
GND2
VCC2
P01/TO00
P10/SCK00/SCL00
P12/SO00/TXD0/TOOLTXD
P14/SI20/SDA20
P16/TI01/TO01/INTP5
GND3
VCC3
P00/TI00
P11/SI00/RXD0/TOOLRXD/SDA00
P13/SO20
P15/SCK20/SCL20
P30/INTP3
RXD9-2:1[2C]
TXD9-2:1[2C]
TE SUPER SEAL I/F 26+26pin
CN4
6437288-6
A/D6:2[1B]
A/D2:2[1D]
CAN0-L:1[1C]
A/D5:2[1B]
A/D1:2[1D]
CAN0-H:1[1B]
SCI1_TXD:1[1C]
SCI1_RXD:1[1C]
CAN1-L:1[1B]
RSV-CN4-22
RSV-CN4-23
RSV-CN4-24
RSV-CN4-25
CAN1-H:1[1B]
A/D4:2[1C]
A/D0:2[1E]
A/D7:2[1A]
A/D3:2[1C]
SCI0_TXD:1[1D]
SCI0_RXD:1[1D]
CN5
6473418-2
DO2-2:3[7B]
DO2-0:3[7B]
DO1-0:3[7D]
DO1-6:3[7C]
DO1-4:3[7C]
DO1-1:3[7D]
DI9:3[1A]
DI5:3[1C]
DI1:3[1E]
DI8:3[1A]
DI4:3[1C]
DI0:3[1E]
DO2-3:3[7A]
DO2-1:3[7B]
DO1-2:3[7D]
DO1-7:3[7C]
DO1-5:3[7C]
DO1-3:3[7D]
DI7:3[1B]
DI3:3[1D]
DI6:3[1B]
DI2:3[1D]
NA6/8 METER I/F
CN6
SSQ-116-02-G-S-RA
NEO-DATA:1[8C]
CHARGE:3[1A]
CHECK_HEAT:3[1B]
LUMINANCE:3[1C]
RSV-CN6-12
RSV-CN6-13
FUEL.M:2[1A]
BREAK:3[1B]
BELTS:3[1C]
SPEED:3[1B]
Power & Connectors
FULLMONI-WIDE_MAIN-Board_SCH v69
2025/01/03 19:06
Sheet: 4/4